Digital Signal Analysis And Processing

Surendra K.C.

1. Signals, Systems and Signal Processing

Signal

- ✓ The term signal is generally applied to something that conveys information. Examples :
  - ✓ Speech, is encountered in telephony, radio, TV, and everyday life
  - ✓ Biomedical signals, (heart signals, brain signals)
  - ✓ Video and image,
  - ✓ Radar signals, which are used to determine the range and bearing of distance targets.
- ✓ A Signal is defined as any physical quantity that varies with time, space, or any other independent variable or variables that carry some information. Examples :
  - ✓ $x(t) = t + 2t^2$ (signal of one independent variables i.e. time)
  - ✓ $s(x, y) = 3x + 5xy + 7y^2$ (signal of two independent variables i.e. x and y)
- ✓ Signal can be defined as a detectable physical quantity or impulse (voltage, current or magnetic field strength) by which messages or information can be transmitted.

Systems

- ✓ A system may be defined as a physical device that performs an operation of a signal.
- ✓ A system is something that can manipulate, change, record, or transmit signals.
- ✓ In Digital Signal Processing, a system may be defined as algorithm.
- ✓ For example, a filter used to reduce the noise and interference corrupting a desired information-bearing signal is called a system.
- ✓ In this case the filter performs some operations/s on the signal which has the effect of reducing (filtering the noise and interference from the desired information-bearing signal.
- ✓ For our purpose, it is convenient to broaden the definition of a system to include not only physical devices, but also software realizations of operations on a signal.
- ✓ In digital processing of signals on a digital computer, the operation performed on signal consists of number of mathematical operations as specified by a software program. Alternatively, the digital processing on the signal may be performed by digital hardware (logic circuits) configured to perform the desired specified operations.
- ✓ A digital system can be implemented as a combination of digital hardware and software, each of which performs its own set of specified operations.

Signal Processing

- ✓ Signal processing is an operation designed for extracting, enhancing, storing, and transmitting useful information.
- ✓ Signal processing is the challenge of extracting useful information form signals
- ✓ For examples biological data such as ECG, control system signals, telecommunication signals such as radio signals, and many others.

Fig. 1: Elements of Measurement System

- ✓ A signal conditioning element converts one type of electronic signal into another type of signal. Its primary use is to convert a signal that may be difficult to read by conventional instrumentation into a more easily read format. They includes amplification, electrical isolation, linearization, cold junction compensation, and excitation.

Need for signal processing

- ✓ When a signal is transmitted from one point to another there is every possibility of contamination/deformation of signal by external noise. So to retrieve the original signal at the receiver suitable filter are to be used, i.e. the signal is processed to obtain the pure signal.
- ✓ The processing of the signal helps to estimate characteristic parameters of the signal and also to transform the signal in to the desired form.
- ✓ Signals processing involves converting or transforming data in a way that allows us to see things that are not possible via direct observation.
- ✓ Signal processing is concerned with representing the information in mathematical terms and extracting the information carrying out algorithmic operation on the signal.
- ✓ Signal processing allows engineers and scientists to analyze, optimize, and correct signals, including scientific data, audio streams, images and video.

Types of processing

- ✓ Transformation
- ✓ Filtering
- ✓ Detection
- ✓ Estimation
- ✓ Recognition and classification
- ✓ Coding (compression)
- ✓ Synthesis and reproduction
- ✓ Recording, archiving
- ✓ Analyzing, modeling

❖ Based on whether the signal is analog or digital, signal processing is categorized as analog signal processing and digital signal processing.

Analog and digital signal

- ✓ A continuous time signal with a continuous amplitude is usually called an analog signal. A speech signal is an example of an analog signal. Analog signal are commonly encounter in our daily life and are usually generated by natural means.
- ✓ A discrete signals with discrete valued amplitudes represented by a finite number of digits is referred to as a digital signal. An example of digital signal is the digitized music signal stored in a CD/DVD.
- ✓ A discrete time signal with discrete value amplitudes is called a sampled data signal.
- ✓ A digital signal is thus a quantized sampled data signal.
- ✓ A continuous time signal with discrete value amplitudes has been referred to as a quantized signal.

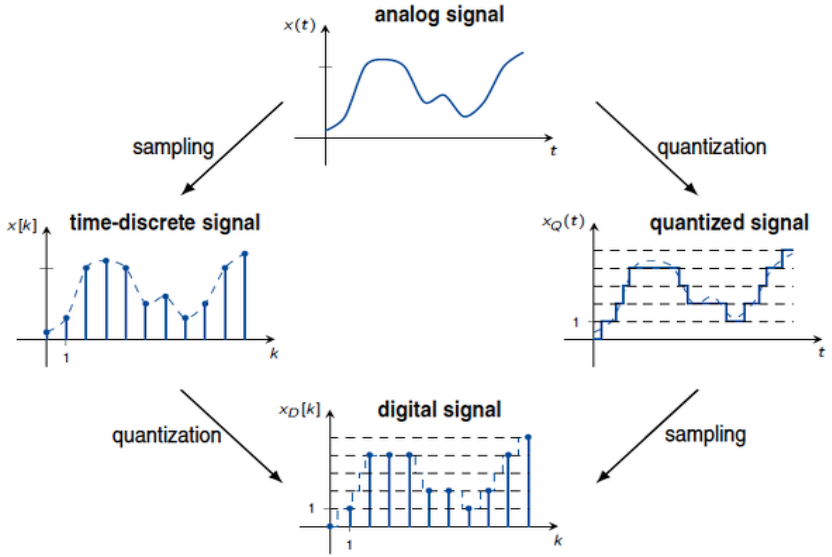

Digital Signal Processing (DSP)

- ✓ Digital Signal Processing (DSP) is the branch of engineering and applied mathematics that deals with the processing and analysis of digital signals.
- ✓ DSP involves various algorithms, techniques, and methodologies to process digital signals to retrieve essential information or improve specific features.
- ✓ DSP deals with discrete time signals, which are represented by sequences of numbers sampled at regular intervals.
- ✓ DSP is the study of signal in a digital representation and the processing methods of these signals.
- ✓ DSP includes subfields like: audio signal processing, control engineering, digital image processing and speech processing, RADAR signal processing and communication signal processing.

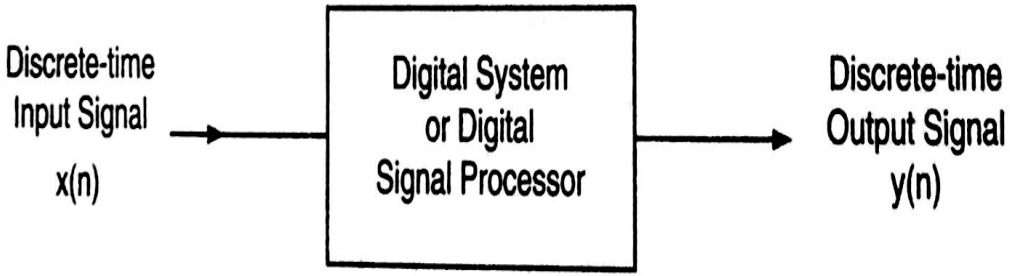

1.1 Basic element of Digital Signal Processing

Figure shows the basic elements of digital signal processing system.

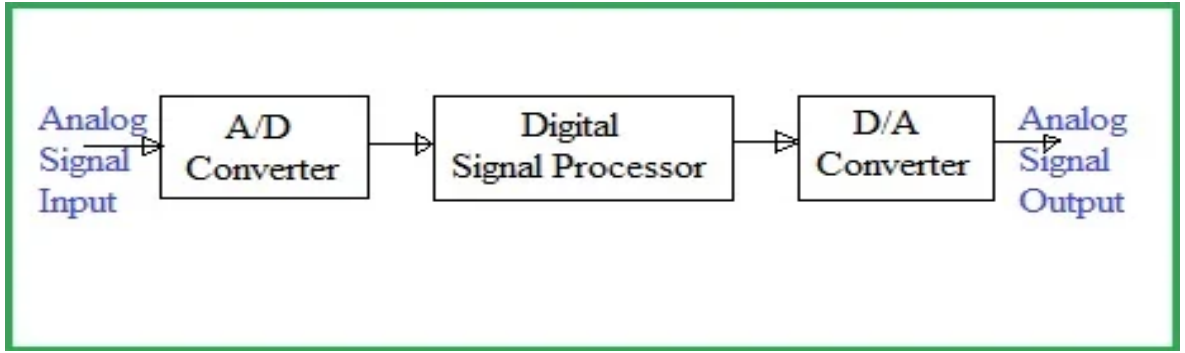

Most of the signal generated are analog in nature. If such signal are processed by a digital signal processing system, then the signals must be digitized. Hence input is given through analog-to-digital converter and the output is obtained through digital-to-analog converter.

❖ Analog to Digital converter

The A/D converter converts analog input to digital input. This signal is processed by the DSP system. The A/D converter determines sampling rate and quantization error in digitizing operation.

❖ Digital Signal Processor

It is also called DSP processor. It performs amplification, attenuation, filtering, spectral analysis, feature extraction etc. operations on digital data. The digital signal processor consists of ALU, shifter, serial ports, interrupts, address generators etc. for its functioning. The DSP processor has special architectural features due to which DSP operations are implemented fast on it compared to general purpose microprocessors.

❖ Digital to Analog Converter

Some processed signals are required back in their original form. For example, sound image, video signals are required in analog form. Hence, the DSP processor output is given to digital to analog converter. The D/A converter converts digital output of DSP processor to its analog equivalent. Such analog output is processed signal.

1.3 Needs/Advantages of DSP over Analog Signal Processing

- ✓ Flexibility: Digital signal processing systems are flexible. The system can be reconfigure for some other operation by simply changing the software program. For example, the high pass digital filter can be changed to low pass digital filter by simple changing the software. Thus no changes in the hardware are required, which is not possible in analog system.
- ✓ Accuracy: Accuracy of digital signal processing systems is much higher than analog systems. The analog systems suffer from component tolerances, their breakdown etc. problems. Hence it is difficult to attain high accuracy in analog systems. But in digital signal processing systems, these problems are absent. The accuracy of digital signal processing systems is decided by resolution of A/D converter, number of bits represent digital data, floating/fixed point arithmetic etc. But these factors are possible to control in digital signal processing systems to get high accuracy.
- ✓ Easy storage: The digital signals can be easily stored on the storage media such as magnetic tapes, disks etc. Whereas the analog signals suffer from the storage problems like noise, distortion etc. Hence, digital signals are easily transportable compared to analog signals. Thus, remote processing of digital signals is possible to analog signals.

- ✓ Mathematical Processing: Mathematical operations can be accurately performed on digital signals compared to analog signals. Hence, mathematical signal processing algorithms can be routinely implemented on digital signal processing systems. Whereas, such algorithms are difficult to implement on analog systems.
- ✓ Cost: when there is large complexity in the application, then digital signal processing systems are cheaper compared to analog systems. The software control algorithm can be complex but it can be implemented accurately with less efforts.
- ✓ Repeatability: The processing of the signals is completely digital in digital signal processing system. Hence, the performance of these systems is exactly repeatable. For example, the low pass filtering operation performed by digital filter, today, will be exactly same even after ten years. But the performance may deteriorate in analog systems because of noise effects and life of components.
- ✓ Adaptability: The digital signal processing systems are easily upgradable since they are software controlled. But such easy upgradation is not possible in analog systems.

- ✓ Universal Compatibility: The digital signal processing systems use digital computers or standard digital signal processors as their hardware. Almost all the applications use this as standard hardware with minor modifications. The operation of the digital signal processing is decided mainly by software program. Hence universal compatibility is possible in digital signal processing systems. Whereas, it is not possible in analog systems. Since a simple analog low pass filter can be implemented by large number of ways.
- ✓ Size and Reliability: The digital signal processing systems are small in size, more reliable and less expensive compared to the analog systems.

Disadvantages of Digital Signal Processing Systems

Even though the digital signal processing systems have some drawbacks as

- ✓ When the analog signal have wide bandwidths, then high speed A/D converters are required. Such high speeds of A/D conversion are difficult to achieve for same signals. For such applications, analog systems must be used.
- ✓ The digital signal processing systems are expensive for small applications. Hence, the selection is done on the basis of cost complexity and performance.

Signal Analysis and Signal Processing

Signal processing involves the manipulation and transformation of signals, which can be in the form of sound, images, or other data. This can include tasks such as filtering, compression, and enhancement of signals.

Signal analysis, on the other hand, focus on the understanding and interpretation of signals. It involves techniques for extracting meaningful information from the signals, such as identifying patterns, trends, or specific characteristics within the signal.

In signal processing, input is a signal and output is also a signal whereas in signal analysis input is signal and output is information. Usually signal processing require real-time processing, e.g. modulation, filtering, noise removal. However, signal analysis can be done both offline and online by signal analyst.

While signal analysis and signal processing are related, they are not essentially subsets of each other. Signal processing can involve analysis as part of its overall tasks, but signal analysis can be conducted independently of processing, focusing solely on understanding the properties and behavior of signal.

Most of the devices do signal processing but not signal analysis. A TV, a speaker, a sensor, or a phone essentially does no signal analysis. Signal analysis involves mathematical tools as well as devices such as spectrum analyzers, data analysis tools, analytical tools such as FFT, Matlab etc.

Applications of DSP

There are various application areas of DSP some are

1. Speech processing : Speech is a one dimension of speech applications like speech analysis, speech coding, speech synthesis, speech enhancement, speech compression, speech recognition, text to speech conversion etc.
2. Image processing : Any two dimensional pattern is called image. Image processing is used in pattern recognition, image enhancement, image compression, animation, robotic vision etc.
3. RADAR signal procession : RADAR (Radio Detection and Ranging), Development of DSP has led to greater sophistication of RADAR tracking algorithms. RADAR system consists of transmit-receive antenna, digital processing system and control unit.
4. Digital communication : Application of DSP in digital communication comprises of digital transmission using PCM, digital switching using TDM (time division multiplexing), echo control and digital tape recorders. DSP in telecommunication systems are found to be cost effective due to availability of medium and large scale digital ICs. These ICs have desirable properties such as small size, low cost, low power, immunity to noise and reliability.

Applications of DSP

5. Spectral analysis: Frequency domain analysis is easily and effectively possible in digital signal processing using Fast Fourier Transform (FFT) algorithms. These algorithms reduce the computational complexity and also reduce the computational time.
6. SONAR signal processing : (Sound Navigation and Ranging), SONAR is used to determine the range, velocity and direction of targets that are remote from observer. SONAR uses sound waves at lower frequencies to detect objects under water. DSP can be used to process SONAR signals for the purpose of navigation and ranging.
7. Biomedical engineering: X-ray storage and enhancement, ultrasound equipment, CT scanning equipment, ECG analysis, EEG brain mappers, Hearing aids, Patient monitoring systems, diagnostic tools etc.
8. Entertainment applications: CD/DVD players, MPEG, MP3, music, sound and video compression, etc.
9. Industrial applications : Robotics, computerized numerically controlled (CNC) machines, security access, power line monitors, etc.